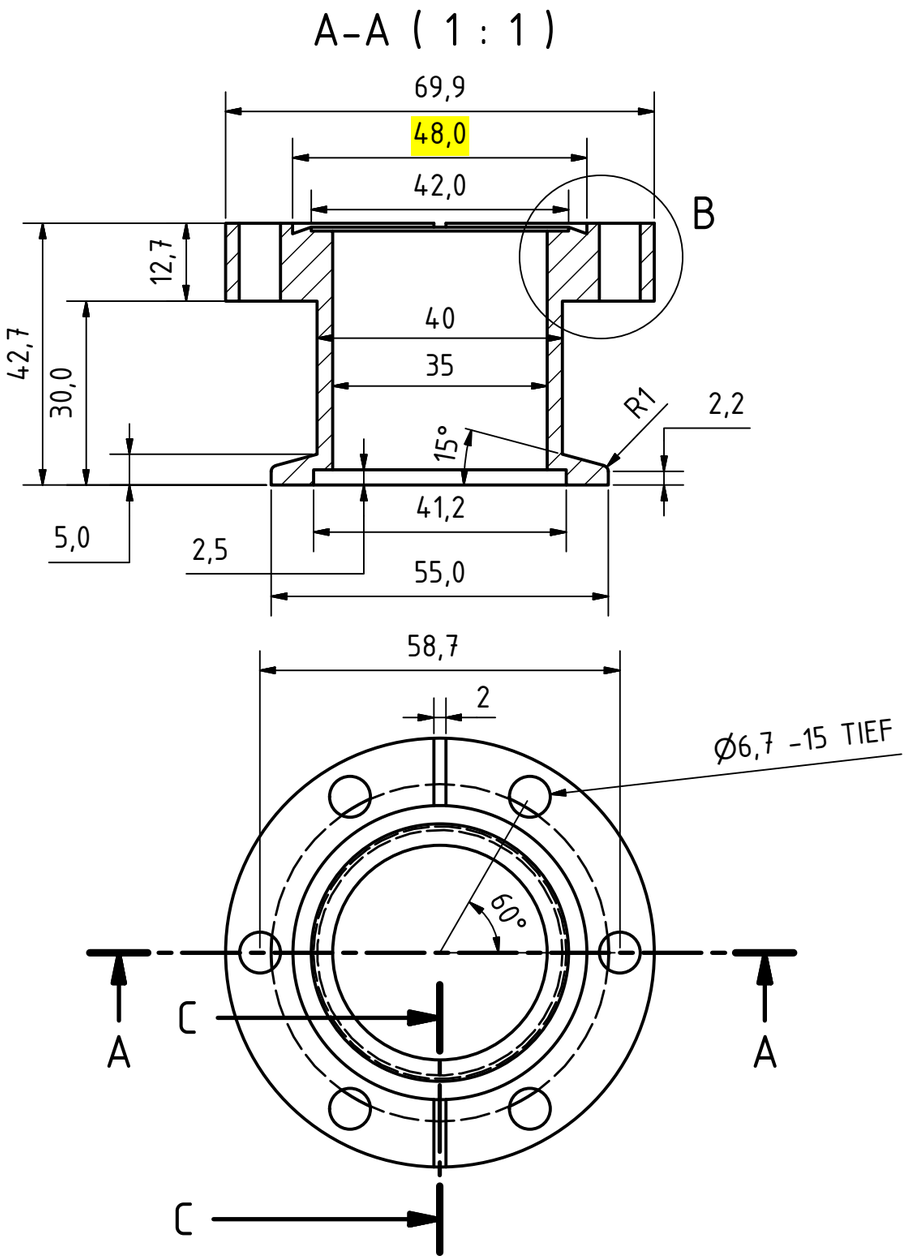


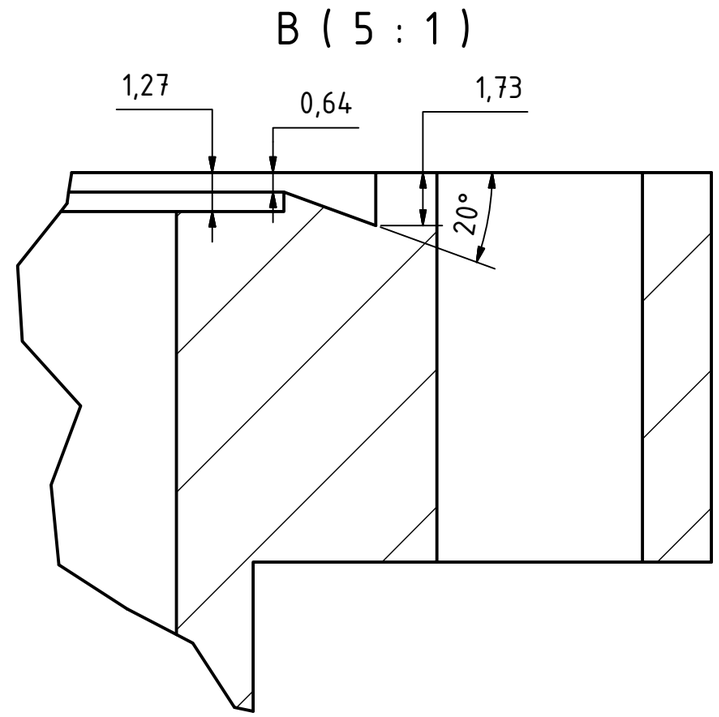


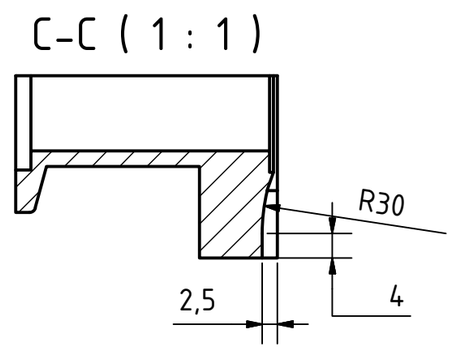


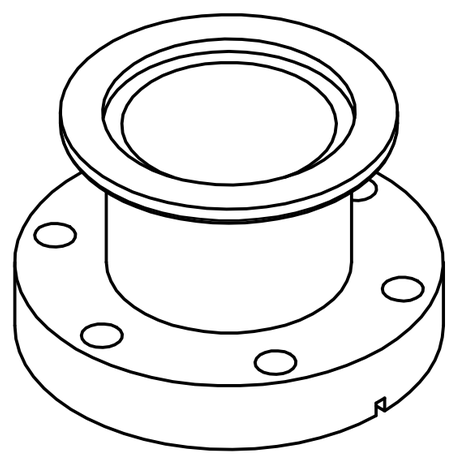

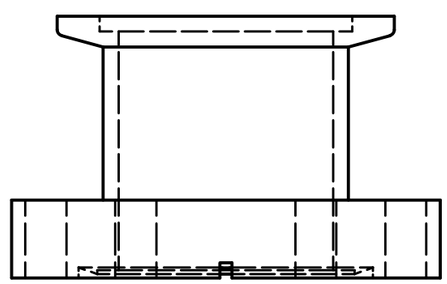

Adapter KF40/CF40
Material: 1.4305
2 Stk.

| | | | | | | |
|---|---|---|---|---|---|---|
| | | | | | Date | Name |
| | | | | Drawn | 06.11.2018 | J. Schilling |
| | | | | Checked | | |
| | | | | Standard | | |
| State | Changes | Date | Name | | | |

KF40_CF40

1

A3